THE CARE AND FEEDING OF YOUR RV IV

Troubleshooting and Repair of Your Air Conditioning System

(Cooling, Heat Pump & Heat Strip)

by

Howard Lefkowitz
Airstream Tech Help Group
WBCCI #6077
techhelp@wbcci.org
wa3vez@comcast.net

INTRODUCTION

To cool your RV you must remove the heat from inside the vehicle and release it to the outside air. This process is essentially the same for your RV, automobile or house air conditioning system. The components may be somewhat different but the functions performed are identical. You require some refrigerant that can be pressurized and then converted to a liquid (usually Freon). Getting the cool air inside the RV and the heated air outside is accomplished by circulating the Freon through two sets of coils (similar to your water based automobile radiator). By blowing on the coils with two fans, the cool inside air can be circulated in the vehicle while the heat removed from the RV is discharged to the outside. Figure (1), illustrates the basic components of a home air conditioning system. Since we are constantly discharging the warm air (externally) and circulating the cold air (internally), we only need one motor to drive both fans. A squirrel-cage fan blade is used to circulate the high airflow inside (cool air) and a conventional fan blade for the outside (hot air) discharge. The compressor does the main work by circulating the refrigerant in order to provide the heat transfer. The evaporator, condenser and refrigerant are all part of an inter-connected sealed system that is usually not serviceable. The compressor itself is also a sealed unit with no serviceable parts. An internal failure usually means replacement of the complete unit. After about 15 to 20 years if your compressor has failed, it is time to replace the entire A-C unit.

There is a high-pressure side, and a low-pressure side to all A-C systems. The cooling cycle starts with low-pressure Freon vapor, which enters the compressor and leaves as a high-pressure vapor. When gases are compressed, they get hot because the molecules are forced closer together. The high- pressure vapor then enters the **condenser** coil where it is cooled and condensed into a liquid.

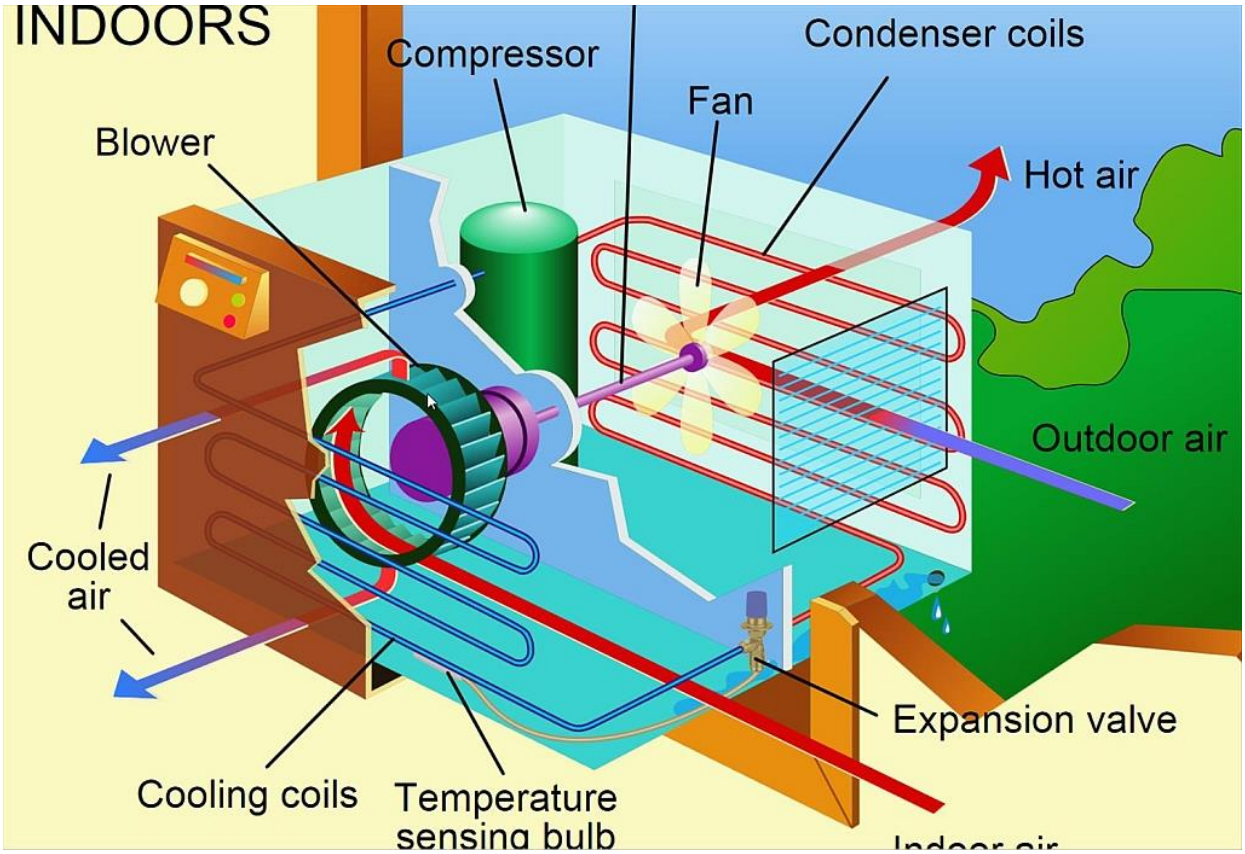

Figure (1) Home Air Conditioner

Going through the condenser, with air blowing over the coils, removes the heat from the freon using the outside airflow through the A-C. The high-pressure liquid Freon now flows through a capillary tube or an expansion valve (older units usually have the capillary tube) that serves to control the refrigerant flowing through the evaporator coils to control the refrigerant. For optimum cooling efficiency, the force and quantity of Freon must be accurately controlled. The refrigerant flowing through the **evaporator (cooling coils)** changes from a high- pressure liquid to a low-pressure vapor. This process removes heat from the air flowing through the coil thus providing cool air, which is circulated through the RV. The low pressure Freon now goes back to the compressor, where the whole process starts over again. This process is illustrated in Figure (2) Basic A-C.

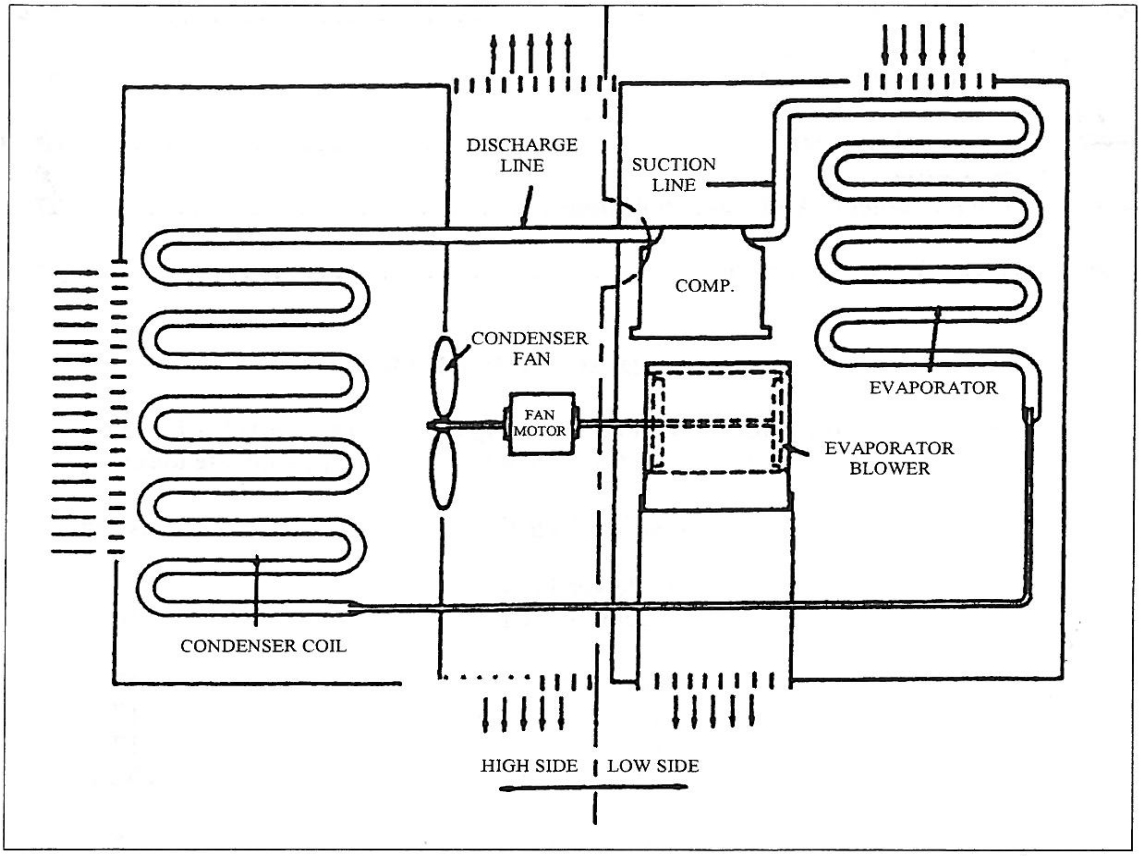

Figure (2) Basic A-C

The process of converting the high-pressure fluid into a vapor (**evaporator or cooling** coils) will remove moisture from the air flowing over the coils thus reducing the humidity of the conditioned air being circulated through your RV. This moisture is deposited in a drain pan and allowed to flow over the side of the RV. In some units, there are small hoses that are fed through the RV walls to drain the base pan. If you get water, dripping into the coach through the internal air filter it usually means that the drain hoses are filled with dirt. Simply use an air hose and blow air back through the drain tubes to clean them. If water is coming through the A-C into the coach, only when it is raining then the problem is usually cracks in the fiberglass A-C cover or a poor seal in the roof gasket. Figure (3) illustrates the airflow through an RV rooftop A-C and the evaporator drain pan location. Reducing the internal air humidity considerably enhances the cooling ability of an A-C.

The above discussion applies to any vehicle or home installation. They all work in a similar manner with the same basic components. Compressors may be cylindrical and driven by engine belts (automobile) or could be direct gear drive with internal motors (RV or home unit).

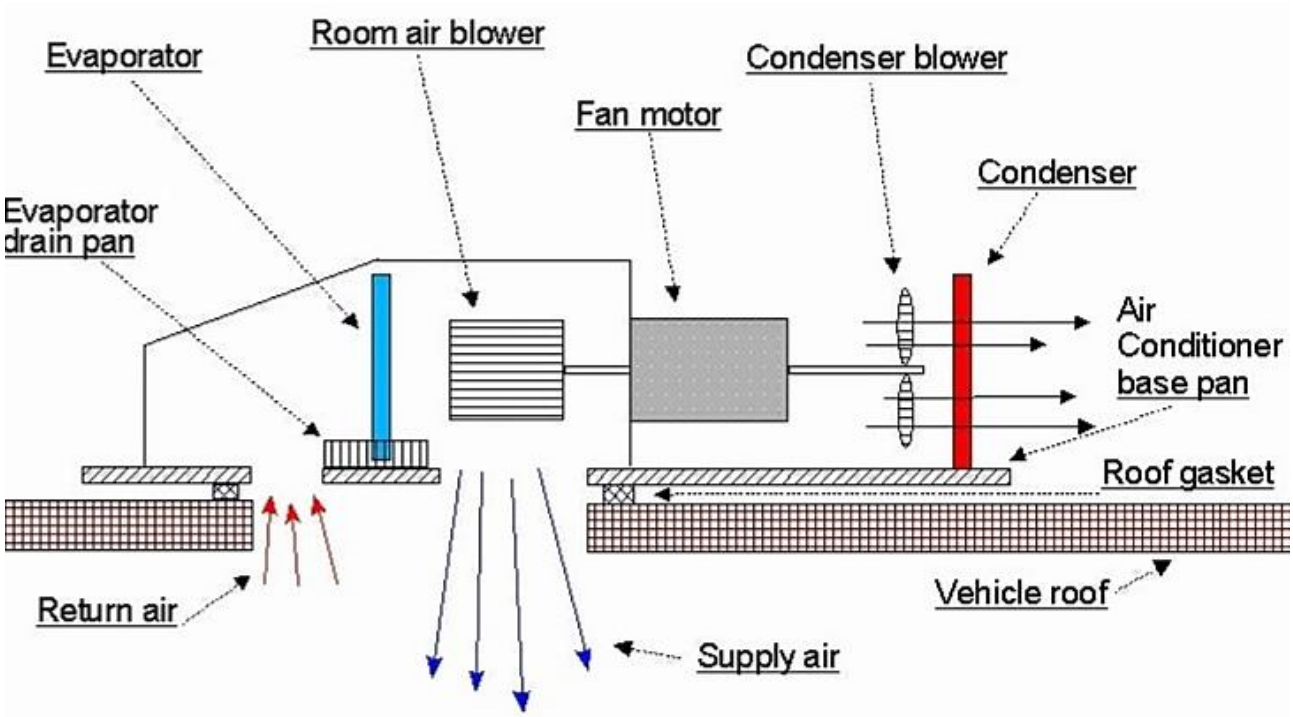

Figure (3) RV A-C Airflow

GENERAL

Roof top RV air conditioners can require, for run time operation, around 1600 to 2000 watts of power, depending on the Btu size. That is why manufacturers include both a 115 volt ac and a 12 volt dc supply. To power an RV A-C with 12 volts dc would require around 160 ampere. Not very practical even if we could install the 200 amp dc to ac converter and a suitable battery pack. Therefore, the obvious choice was to run the A-C from shore power or an appropriate sized generator.

What this means is: **Servicing a roof top A-C is dangerous**. **You should never work on your A-C with the power on, unless you are experienced and completely comfortable working with live 115 VAC electrical equipment.**

Even with the power off you could have high voltages present stored in the large capacitors used in this equipment. Whenever you remove the A-C covers, you should discharge the capacitors in order to avoid a nasty shock. This is particularly dangerous since you are standing on a huge metal ground plane on top of a slippery roof.

Never remove the A-C covers if it is raining and the roof is wet. Touching a hot 120 VAC source will usually just give you a mild shock. However, with a wet surface the mild shock can become lethal.

A 13,500 Btu A-C is equivalent to about a 1 ton home unit, while a 15,000 is about 1 1/4 tons. So a motorhome with two units has about 2 ½ tons which is about what a small home would have. However,

Your RV has very little insulation and rather poor windows compared to a typical house. (Btu is just a measure of energy that is useful to compare different energy sources.)

A properly running A-C should have a temperature difference of about 16 to 22 degrees between the input and output. What this means is that if you run your unit on high until the temperature in the rig stabilizes and then measure the temperature difference, directly on the unit at the return and outlet ducts, the difference should be in the above range. If you are not within the range then you may have a problem. The actual temperature in the rig is dependent on the wall and roof insulation, the quality of the windows, the temperature set on the thermostat and the windows/door/access port seals.

Thermostats started as just a knob setting on the A-C unit, a manually adjusted wall mounted setting, electronic digital and finally the 4, 5 or 12 button full-blown computer control. The multi-button units are actually computers that use two wires for inputting signals to the computer board installed in the A-C. The newest 12-button controls can provide 4-zone coverage and can control multiple A-C, Heat Pump, Furnace and Heat strip climate control devices. They are not easily serviced and are considered a total replacement part. The only way I know to test them is if 12 volts dc is being provided to the thermostat (through a fuse in the A-C board) then just plug in a new unit. If this does not work then the problem is in the computer board mounted in the rooftop A-C.

AIR CONDITIONER

Figure (4) is an electrical drawing (schematic) of a basic RV air conditioner. It does not include the electronic control system board. It is not very complicated looking and has just a few components. There are actually three capacitors shown. On the far left is a dual capacitor which has both a fan and a compressor run time unit contained in the same case. The fan motor requires a run capacitor just like the compressor to provide a smooth running speed. The compressor has two electrical windings consisting of both a start and a run coil. The run capacitor is hooked to the ‘R’ terminal (run coil) and an additional start capacitor is hooked to the ‘S’ terminal (start coil). The ‘C’ terminal is connected to the common bus line. The multiple wires to the fan motor provide the ability to switch to different fan speeds. The use of an additional start capacitor depends on the size of the A-C compressor. These are very high value capacitors capable of storing significant energy in order to be able to start the compressor under very high air temperature conditions. They can hold their voltage levels for long time periods after power has been removed from the A-C. They can easily become a source for severe shocks that can startle you and cause you to lose your footing on the roof.

Figure (5) illustrates a dual fan-compressor **run** capacitor and a single compressor **start** capacitor. Figure (6) illustrates a dual capacitor with a special cover and a capacitor that is using a bleed resistor to drain the charge from the unit. Most of the time there is no bleed resistor and the charge on these capacitors **must be removed** before you do any work on the A-C. **Get in the habit of discharging the capacitors as soon as you remove the A-C cover and before you do any work on the A-C.**

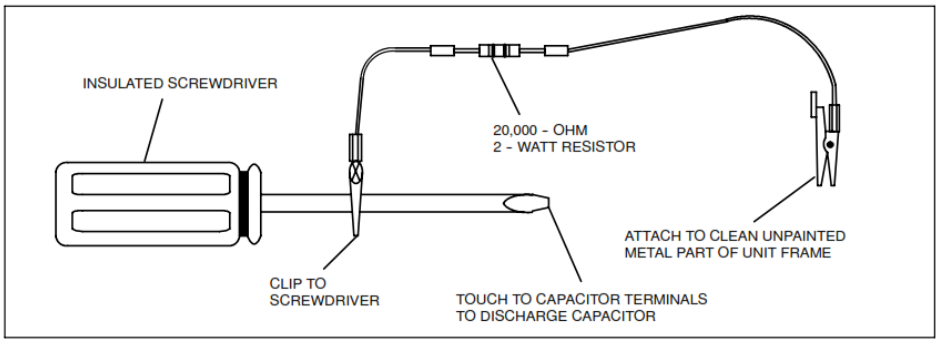

This circuit will do a fine job discharging the capacitors and not put any burn marks on your screwdrivers or the rig.

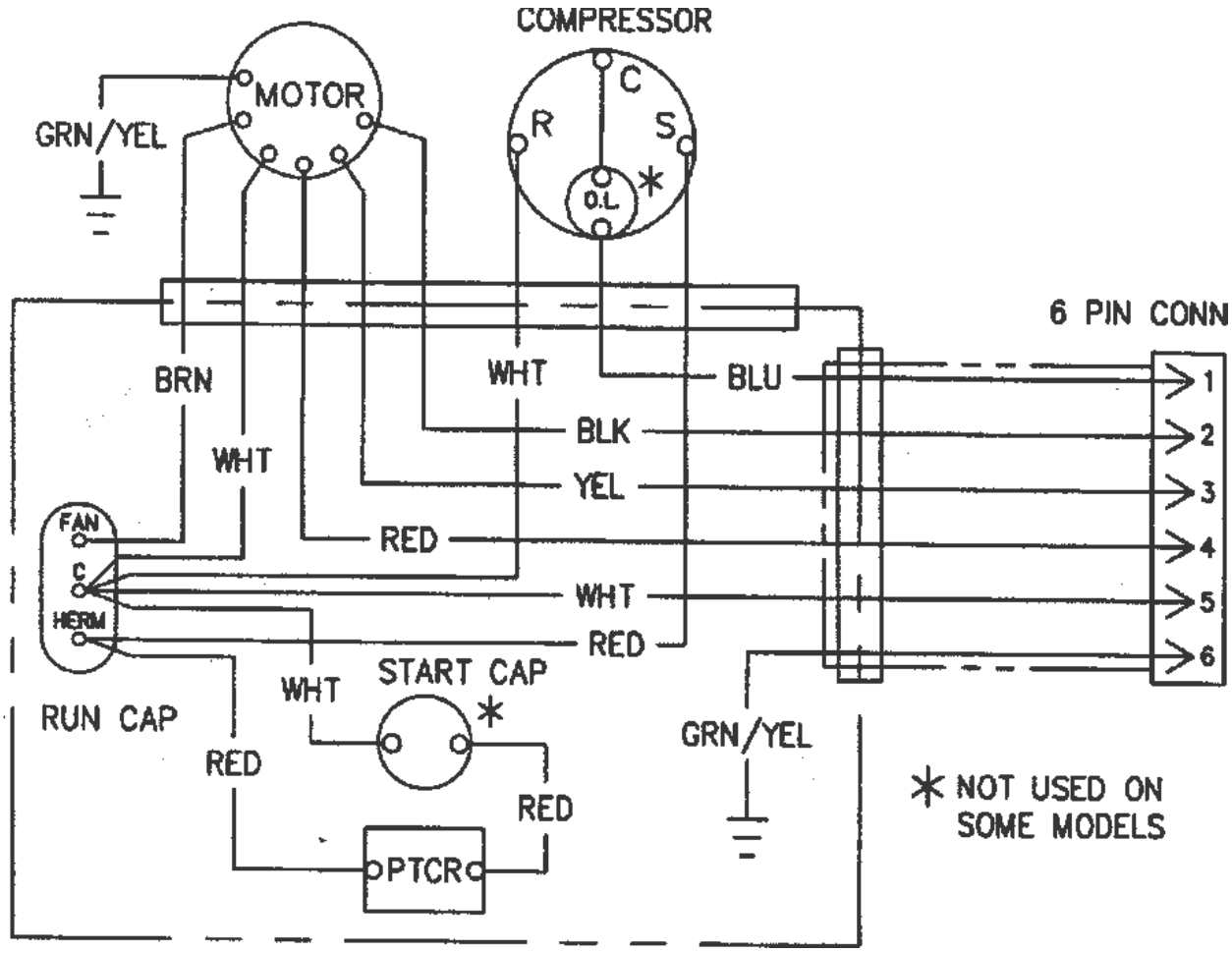

Figure (4) A-C Schematic

The 'OL' on the compressor is an over load circuit which will remove the power if the unit gets too hot. If your compressor turns off during an extremely hot day, it may be responding to low line voltage (below 105

vac). Since the power requirement does not change, low line voltage will result in increased current required. At a certain current level, the OL circuit will turn off the unit. You must wait several minutes until the compressor cools before turning on the A-C system again.

Figure (6) Single Start and Dual Run Capacitors

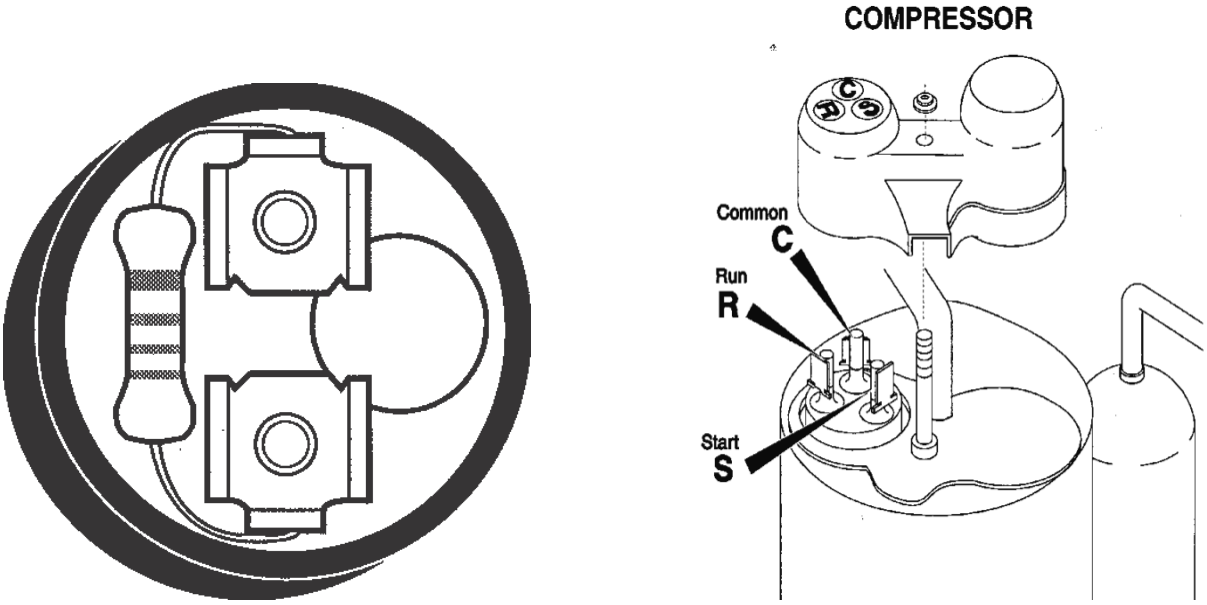

Figure (6) Capacitors with Drain and Special Cover

In series with the compressor start capacitor is a PTCR (positive temperature coefficient resistor) device that increases its resistance to the flow of current as its temperature increases. Initially the resistance is very low and the start capacitor is effectively connected to the compressor start winding. After the compressor starts and warms up the PTCR resistance increases in value until the start capacitor is disconnected from the compressor. In earlier models, this function was performed by a time delay relay that opened and closed a relay switch to help start the compressor. The PTCR must also cool off before re-starting the A-C. Many of the required time delays are built into the circuit board electronics, which is why the A-C, doesn't work immediately when you turn on the switch. PTCR's burn out on occasion, which results in the compressor not starting, particularly when it is under high loads (hot day). Usually they will look and or smell burned and if removed from the circuit can be easily measured with an ohmmeter. The usual failure mode is to open. The resistance should be from 10 to 25 ohms. The PTCR is designed to remain hot and run continuously for as many hours as you run the unit so wait a few minutes after you shut the A-C off for it to cool down.

Figure (7) shows a fan kit which includes the dual shaft motor and both the squirrel and six bladed fans. For maximum airflow, the squirrel blade is used for circulating the RV's internal, cool air.

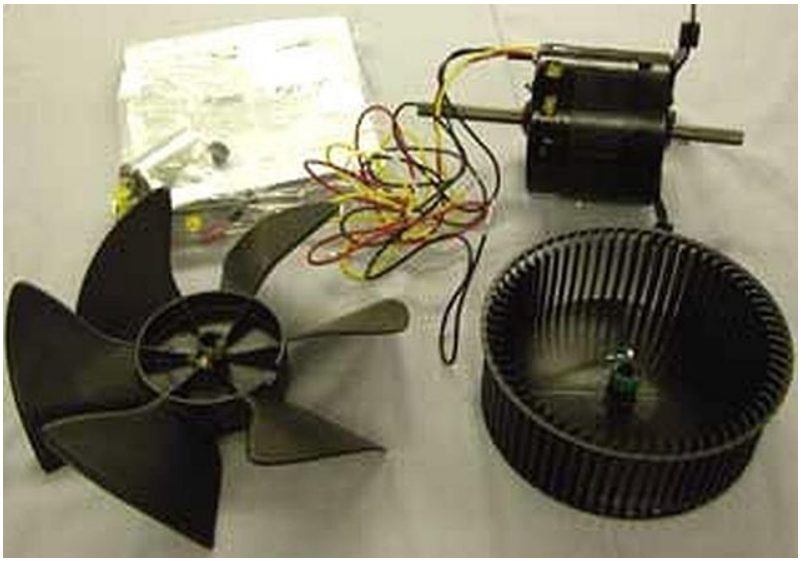

Figure (7) A-C Fan Kit

ZONES

Each air conditioner is considered a separate Zone although there may be other zones without an A-C. My Motor home has four heating zones; Living Room, Bed Room, Bath Room and RV storage area. The Living and Bed Room Areas each have both a furnace and an A-C. The Bath Room has its own furnace with a separate manual thermostat and the storage area (including fresh, grey and black water tanks) has a knob-set fixed thermostat.

Figure (8) illustrates a typical Motor home dual zone layout while Figure (9) shows a Trailer single zone.

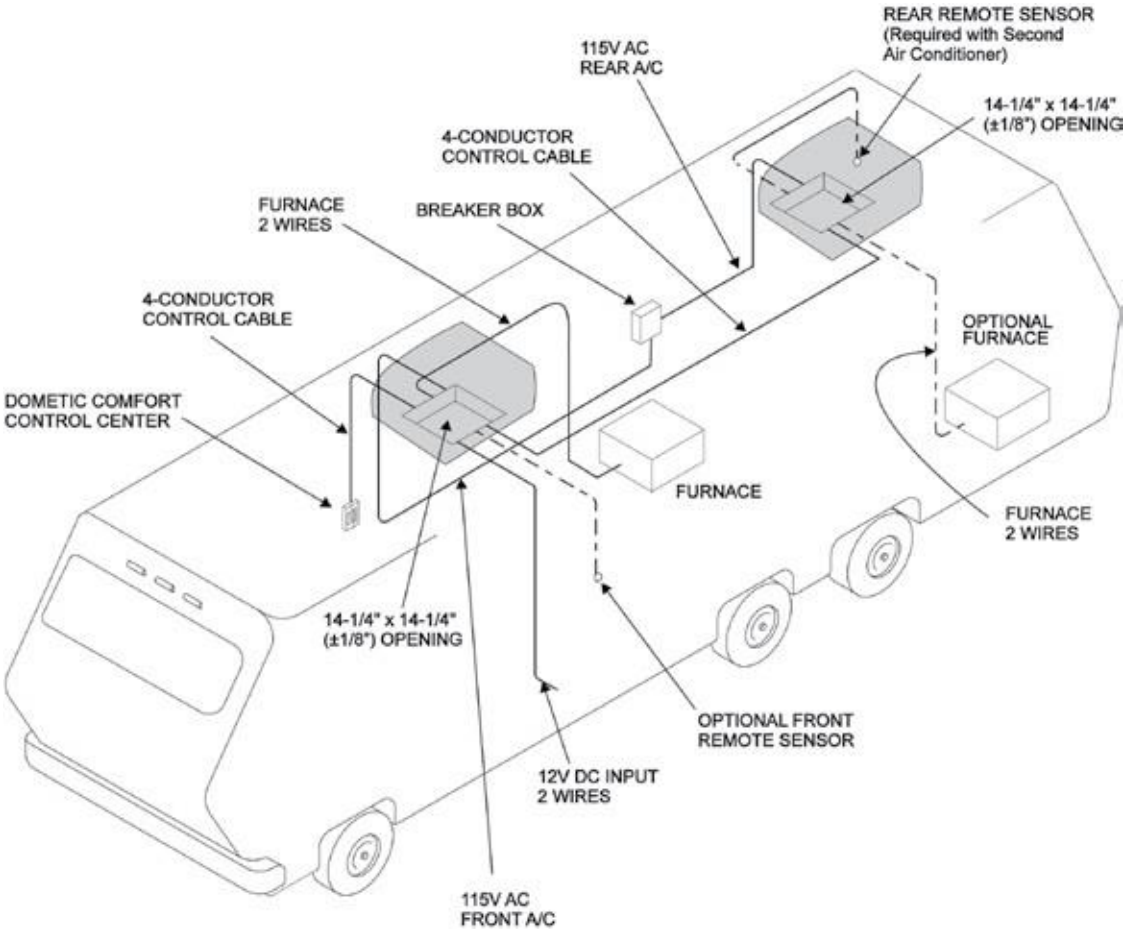

Figure (8) Dual Zone Climate System

There are two A-C units and two Furnaces. The front units utilize the Comfort Control Center (CCC) sensor which monitors the temperature in this zone. The CCC can control the back A-C and Furnace, however, it requires a rear sensor to monitor the actual temperature in the bed room area. The CCC will control, turn-on and turn-off, all of the A-C's and furnaces. Some high-end 45 foot Motor homes will carry three A-C's for a total of three zones. In fact, on a Florida trip I ran into a 45 foot unit that had 6 Dometic A-C's installed. It was originally built for a movie star and when she died the current owner purchased it for use on his Paradise Park site. How can these all be operated on 115 vac, 50 amp shore power, you might ask. They cannot, however, it also had a 20 KW generator that can easily handle all of the A-C's. Pretty cool you might say. This was actually a seven zone Motor home including the storage area. Since a CCC will only handle 4 zones it required two CCC's. The typical Airstream trailer is a single zone, Figure (9).

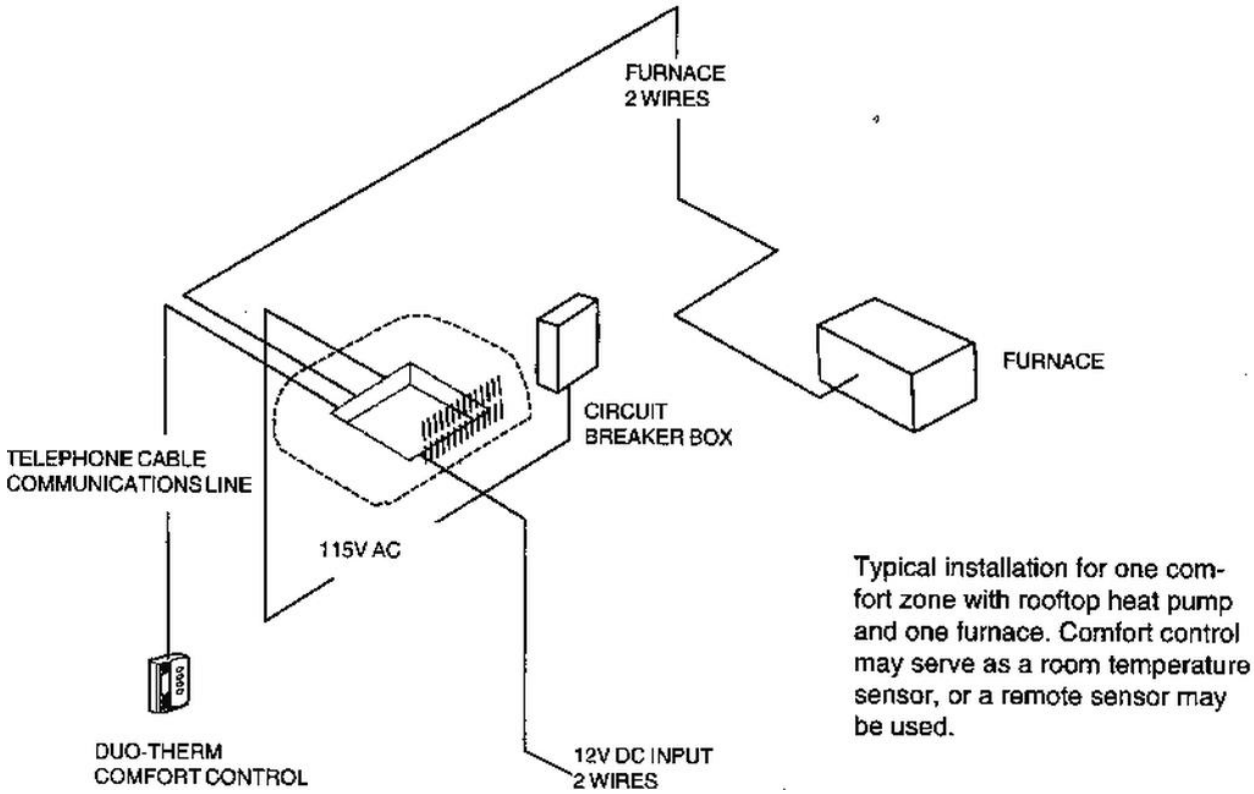

Figure (9) Single Zone Climate System

In a typical trailer, we have a single A-C and a Furnace to be controlled with a CCC. The sensor in the CCC is used to monitor the ambient temperature. For the larger 34 foot trailers, which carry two A-C units, there are multi zone capable CCC's just like a Motor home. Notice the Furnace wires going to the A-C. In all Comfort Control Climate installations the temperature is monitored with the internal sensor and sent to the control board in the A-C. All climate related equipment is turned on or off from the A-C control board. The wires in Figure (9) labeled 'Furnace 2 wires' send 12 vdc to operate the furnace. The 12 vdc going to the A-C operates the control circuit board. So if I sense the air temperature and send this info to the A-C the control board can control my furnace to keep the heat in the RV where I desire. I can also have the CCC control my heat pump and electrical heating strip if included in my model.

CONTROL BOARD

Figure (10) illustrates a dual zone board with two start capacitors and two control boards to handle the two A-C units. Dipswitches are used to select the zone number, presence of heat strips, furnaces and a heat pump. If external sensors are used in different zones, they are plugged into the boards in the sensor plug area. Figure (11) shows the Electronic schematic of the circuit board that illustrates the 3-amp fuse. This fuse (automotive type) is used to provide 12 vdc for the CCC thermostat. It is accessed by removing the rooftop A-C cover.

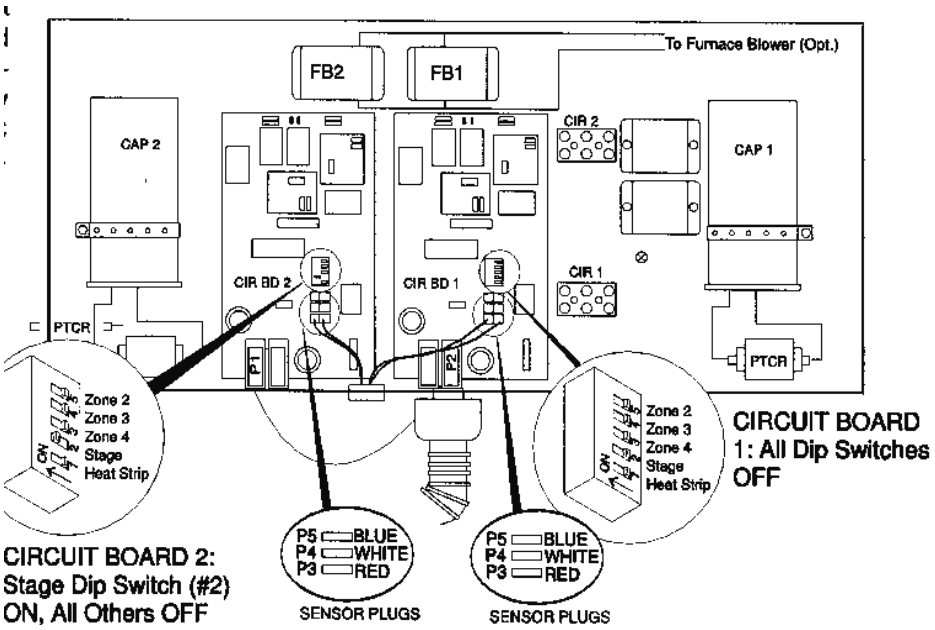

Figure (10) Dual Zone Board

If the Thermostat is not working at all and you have determined that the fuse is blown, you may have a short in the CCC circuit board. So, before you finish on the roof check for the 12 vdc at the phone type plug and then make sure you have a working CCC.

The fuse is in the lower left hand corner of the Control Board, Figure (12). It is a purple 3-amp unit and should not be replaced with a higher rated fuse under any circumstance. Remember the fuse is actually protecting the telephone type wire that is going through the ceiling and down through the walls. If you draw too much current through the small telephone wire you could burn out the wire and be forced to open up the ceiling and walls to replace it.

The board contains several relay's which are used to send signals to the other climate equipment. A relay has switch contacts that can be used to switch high current loads or remotely control something. Your automobile uses a dozen or more relay circuits that provide high current capability for your headlights, heaters, air conditioning and even the engine starter (uses a solenoid type relay).

The Control Board actually uses 12 vdc to turn the various climate systems on and off through relays that receive signals from the computer system. The CCC computer talks to the Control Board Computer and provides complete control of our RV's climate. Actually, a pretty neat system.

The freeze control consists of a thermistor, which monitors the temperature of the evaporator coils and shuts off the compressor if it gets too cold. If the coils freeze the airflow will be blocked which can seriously damage the compressor. This is part of the 5-button CCC modification intended to solve a problem that existed with the 4-button units.

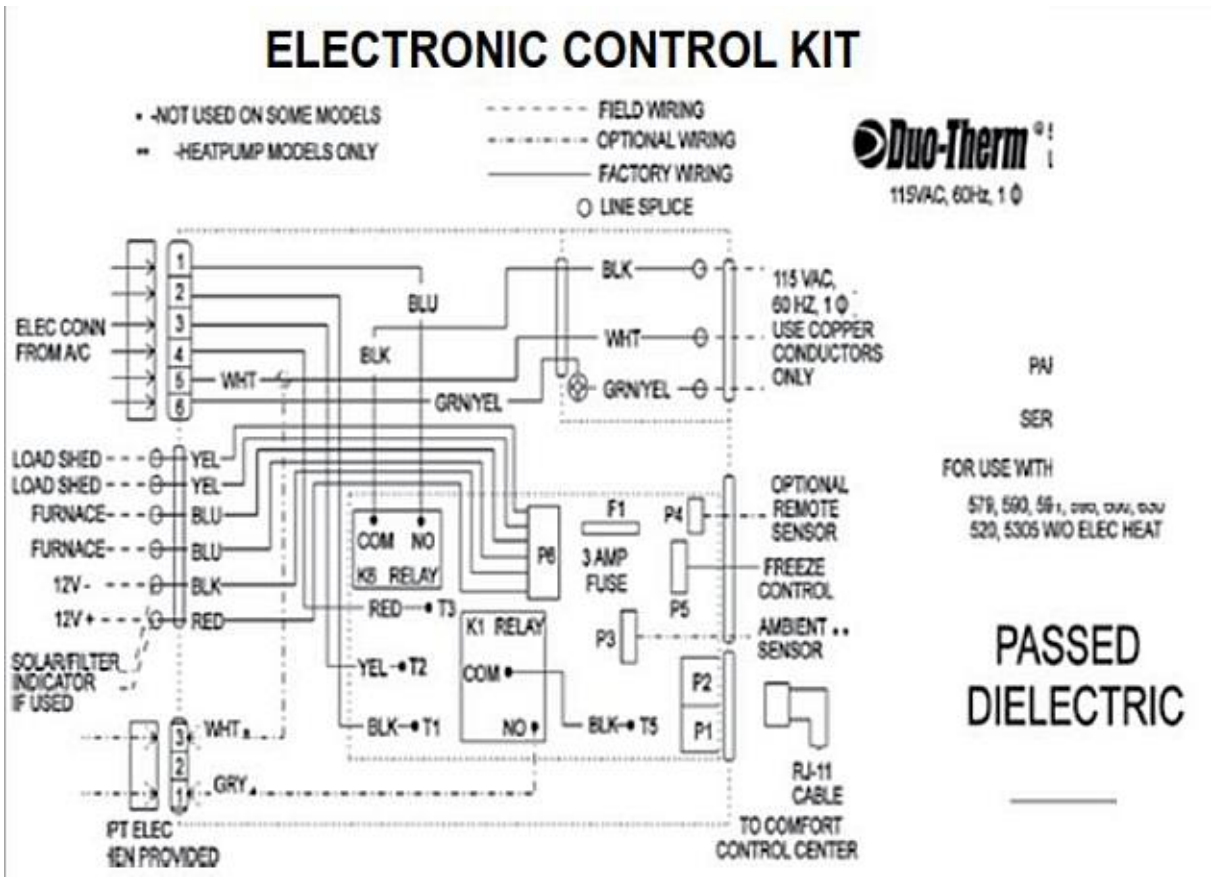

Figure (11) Electronic Control Circuits

You can see the computer chip in the center of the board in Figure (12), which tells all of the relays what to do. The dipswitch is intially set to let the computer know what is installed in your RV and in you're A-C (heat pump, heat strip, furnace, etc). All of the equipment is registered at setup and only needs to be changed it equipment is added.

Figure (12) Control Board

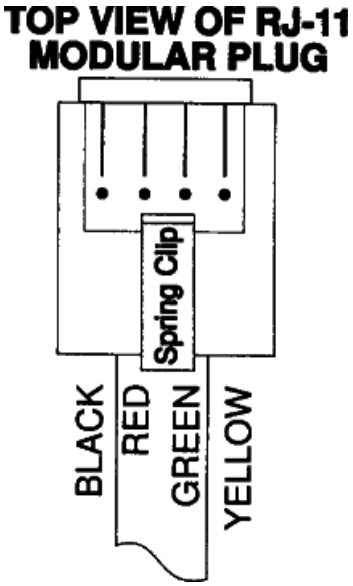

Figure (13) RJ-11 Control board Plug

Figure (13) illustrates the proper wiring color sequence for the CCC to A-C control board cable. There should be enough cable to replace the modular plug if it is defective. You will need a special telphone connector cable mounting tool to change this plug. I purchased mine at Home Depot for less than $20 (with instructions) in order to replace the broken plug on my CCC. Be sure and get the wire color code in the correct order.

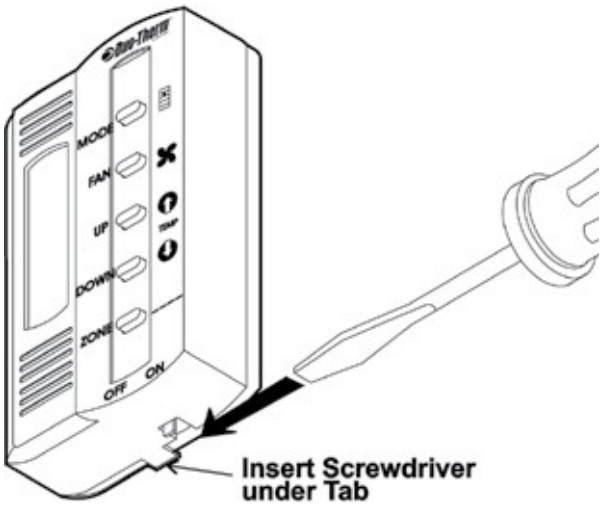

Figure (14) Removing the CCC Cover

Figure (14) illustrates how to remove the cover on the 4 or 5 button CCC so you can replace it, fix the cable or run some tests. To re-assemble just push the cover straight back.

Figure (15) is a schematic for an A-C that includes a heat-strip.

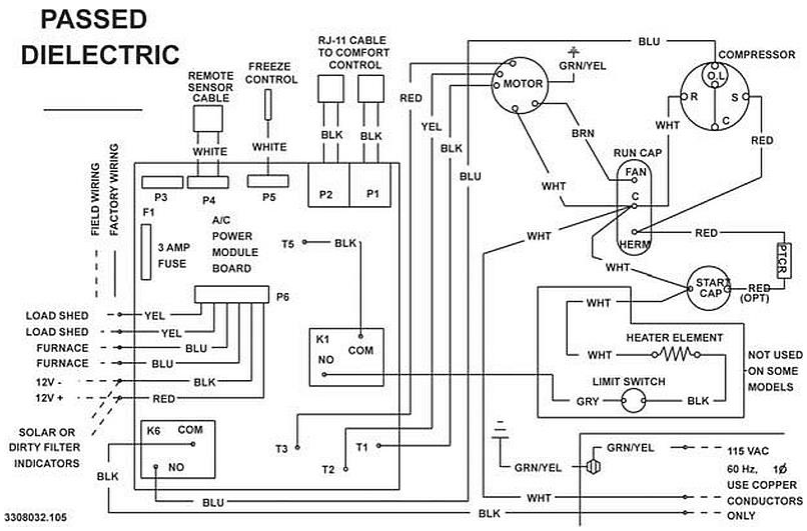

Figure (15) A-C With Heat Strip

The heat strip element is just below the compressor start capacitor on the right. It is turned on and off using relay K1 in the center of the schematic. When you select heat strip on the CCC this will activate the heating element. This is useful for taking the chill off on a cool morning or in the evening when you do not require the furnace. Warmed air will be circulated in the RV. Figure (16) illustrates the actual heat strip which is similar to a those used in a portable electric heater.

Figure (16) Heater Strip

THERMOSTATS

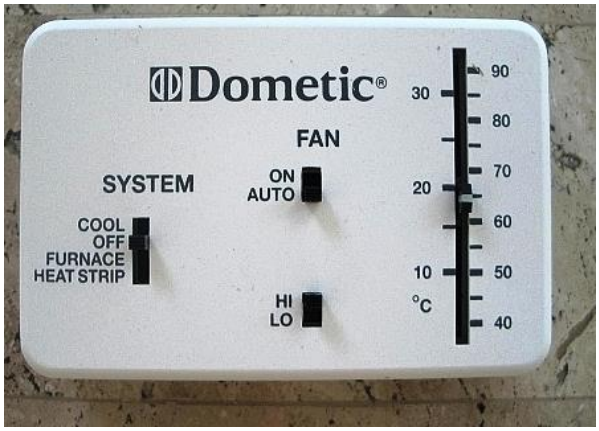

Figure (17) Analog Thermostat

Figure (17), illustrates a typical analog thermostat, which is designed to control your furnace, air conditioner, and if available a heat strip. These new combination thermostats are nice because they use one temperature monitoring system (with sensor and temperature setting) that serves the entire climate needs for the RV.

Older RV's have a simple thermostat that just handles the furnace, which is virtually identical to the older home units. These are inexpensive and available at any Hardware store. Older units have controls for the air conditioner and heat strip on the ceiling unit itself, with a manual temperature adjustment.

The most advance thermostats are the digital Climate Control Centers that provide control for all of the RV temperature related equipment. These can include multiple location sensors, air conditioner, furnace, heat pump and heat strip. There can be four different zones with a different set of climate control equipment in each zone. This one CCC allows you to monitor and adjust different temperatures for each piece of equipment in the RV. Once it is set up correctly and you learn how to use it the CCC, illustrated in Figure (18) provides the ultimate in RV comfort.

The 4 button units are now obsolete and no longer supported with spare parts. If they fail the only recourse is to obtain a used rebuilt unit. They can be replaced with a five button CCC, however, this requires that the A-C control board also be changed. The newest CCC is a 12- button unit (for multiple zone use) or a 4-button unit for single zone operation, These are illustrated in Figure (19). The newest CCC's also require that the old control boards be replaced if you are going to update your control center.

Figure (18) Four & Five Button CCC

Figure (19) New Signal and Multiple Zone CCC

Figure (20) illustrates a 5-button CCC conversion kit for replacing an old 4-button unit that has failed. It is a complex conversion and not a project for a complete beginner. In addition to the board and CCC components, a freeze prevention circuit (part of the kit) must be installed.

Figure (20) 5 Button CCC Conversion Kit

If your A-C is older than 15-20 years, you should just buy a new unit and not try to update it. If it is running fine and is less than 10 years old, then updating the CCC has some merit.

Appendix (A) describes how to upgrade a 4-button CCC to a newer thermostat. Charles Gregory, one of our WBCCI members, had a failing 4-button system and decided to convert his dual A-C system to the newest 12-button CCC 2 thermostat.

Occasionally a voltage spike or power failure occurs that results in the CCC not working correctly. The first thing you should do is perform a system reset which turns on the CCC in installation mode and resets the computer. I have fixed a number of systems using this simple procedure.

To do a **System Reset, for a 5-button CCC** turn the **ON/OFF** switch to **OFF**. Simultaneously depress and hold the **MODE** and **ZONE** buttons while turning the **ON/OFF** switch to **ON**. **FF** should appear in the LCD display until the **MODE** and **ZONE** buttons are released.

To do a **System Reset, for a 5-button CCC** turn the **ON/OFF** switch to **OFF**. Simultaneously depress and hold the **MODE** and **ZONE** buttons while turning the **ON/OFF** switch to **ON**. **FF** should appear in the LCD display until the **MODE** and **ZONE** buttons are released.

HEAT PUMP

An RV heat pump transfers heat from the external air to the internal RV environment. This is just the reverse of the air conditioner. In fact, Appendix (B) describes how the addition of a reversing valve (which changes the flow of refrigerant) and converts the air conditioner to a source of heat for the RV. By activating this valve, the evaporator coils are swapped with the condenser coils so we extract heat from the outside and circulate it inside with the squirrel cage fan. To convert to a heat pump we have to send a signal to the reversing valve, which is illustrated in Figure (21).

The reversing valve is shown at the top, next to the compressor. When you set the CCC to operate the heat pump this sends 12 volts to this valve, which reverses the refrigerant flow. You are now in heat pump mode and your CCC temperature setting determines how long it will run. In this mode, the fan runs continuously

to circulate the air and maintain an even temperature. Heat pumps will shut off if the outside air temperature gets below 40 degrees and will turn back on when it goes above 45 degrees.

The advantages include one unit for both heating and cooling, no furnace needed if you live in an area that is always above 40 degrees and when you are using shore power there is no need for extra cost propane.

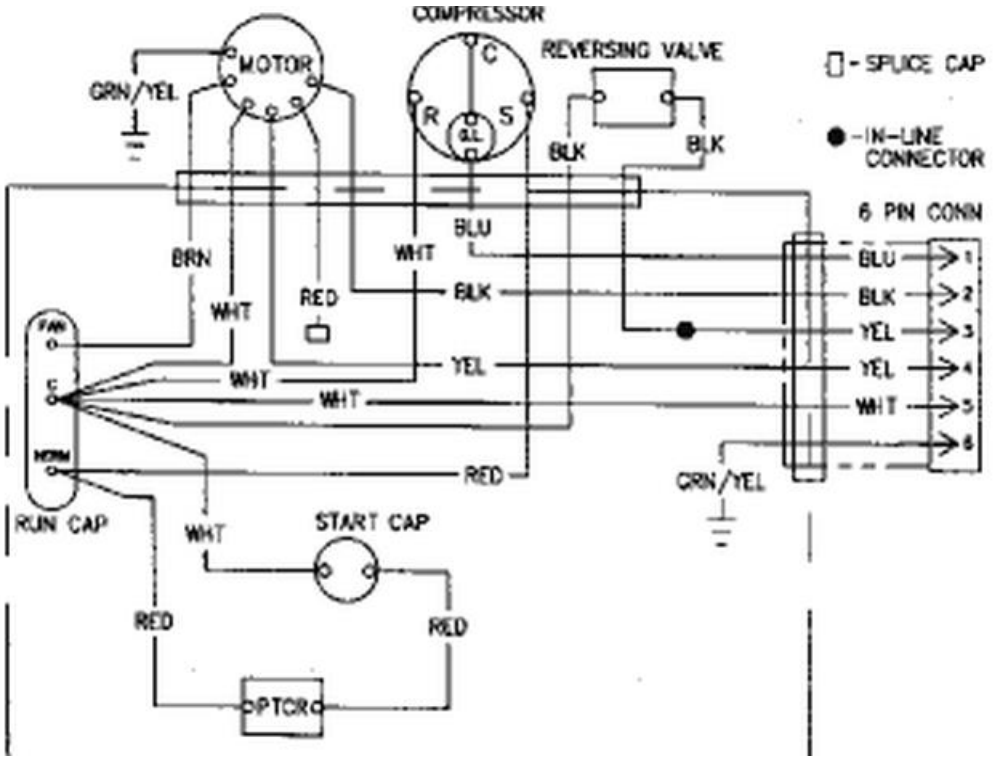

Figure (21) Heat Pump Mode

Is it worth purchasing a combination A-C and Heat Pump? If you live in a part of the country where the temperatures get below 40 degrees than you need a furnace in any case. The cost difference between an A-C or an A-C/Heat Pump is around $150 to $175. In over 50 years of camping with trailers and motor homes I cannot remember any time that I used my Heat Pump. When I was connected to shore power and just needed to take the morning chill off I turned on the heat strip. So unless the unit I purchased come with a heat pump I would not replace any failed unit with one.

If you're A-C is working and your heat pump does not function then the most likely failed component is the reversing valve. Replacing this valve requires that the freon be removed, the system be purged and then leak tested and re-charged. This is a job that requires special equipment, test meters and pipe sealing equipment and is best left to a professional.

TROUBLESHOOTING

In this section, I will list the typical component failures I have found, that a reasonably competent handyman could be expected to diagnose and replace. Failures in either the CCC or the control board require the replacement of the entire subassembly. Other components that could be replaced include capacitors, the fan motor or blades, PTCR and heater strip. Actually, there are not very many parts so the challenge is in the troubleshooting to determine which one has failed.

Remember:

Servicing a roof top A-C is dangerous. You should never work on your A-C with the power on, unless you are experienced and completely comfortable working with live 120 VAC electrical equipment.

Even with the power off you could have high voltages present stored in the large capacitors used in this equipment. Whenever you remove the A-C covers, you should discharge the capacitors in order to avoid a nasty shock. This is particularly dangerous since you are standing on a huge metal ground plane on top of a slippery roof.

Never remove the A-C covers if it is raining and the roof is wet. Touching a hot 120 VAC source will usually just give you a mild shock. However, with a wet surface the mild shock can become lethal.

Nothing Works

1. Check that you have 12.6 volts dc at the input power strip to the A-C unit and that the terminals are tight. This is required to run the control board. Are there any other dc appliances or lights not working? If yes, this could mean that a dc circuit breaker has failed.

If you hear a clicking sound near the dc circuit breaker board it could be a breaker turning on and off very rapidly. Most of the breakers are of the self-healing type, which means that they will open when their rating is exceeded and close when the current drops below the rated level. This could mean that either there is a short in the A-C control board or some other component on that line. Disconnecting the lead from the A-C power strip will tell you if the short is on the control board.

2. Check your 20-amp A-C circuit breaker (s). Check that you have at least 115 volts ac at the input power strip in the A-C unit and that the terminals are tight. Your ac shore power extension is rated at 30 amps and uses a special plug so it can easily provide the 20 amps needed for your A-C. If you need a longer extension, it must be a 30-amp rated power cord. Using a 15 or 20-amp shore power extension could result

in a fire or a burnt power plug. The shore power cord should not have any hot spots since this is indicative of a high resistance and lost power. This will reduce the actual voltage supplied to the compressor and could result in significant damage to the A-C.

You should periodically clean the terminals on your 30 and 20 amp cords. When you plug or unplug them, with the power, on you will get some arcing. This leaves black carbon deposits that can eventually result in a poor connection.

3. If there is nothing on the CCC screen then either it is defective or not receiving 12 volts dc from the control board. You can remove the CCC cover and carefully check for 12 volts on the cable connector. No 12 volts would indicate that the 3-amp fuse on the control board has opened. If you replace this fuse and it blows again, you most likely have a failed component in the CCC, which is drawing excessive current. You can purchase a rebuilt CCC on the Internet; however, a new unit is only about $100.

If the CCC does have a temperature reading, it may still have a problem in the computer section. There may be specialized test equipment for checking a CCC, however, I have never run into any. Essentially, this is a computer (CCC) communicating with another computer (control board). The only way I know to test this is to plug a new CCC into the RJ-11 cable and if the system works, replace your unit. If the system does not work than you have a defective control board that needs to be replaced. Do not accept a one or two hour trouble shooting charge from a repair shop in order to evaluate the A-C. Just trying a new CCC takes about ten minutes. I ran into this problem a few years ago and instead of paying for an hour of trouble shooting, I just purchased a new CCC. I later found a loose 12-volt ground wire in the A-C unit and sold my spare CCC, to a very appreciative next-door neighbor, at last year's International Rally.

Other Climate Appliances

1. Set your Mode selector button to fan and make sure it is working correctly. Check the heat strip and the furnace to see if they are working. If you have, multiple Zones check the same items in each Zone. If everything is working except for one A-C then we can reasonably assume that the CCC and control board are fine.

2. If the **fan is not working**, the problem is usually that the run time capacitor has an internal short or is open. Usually, the three terminal capacitor includes a separate run unit for both the fan and compressor with an additional capacitor used to assist in starting the compressor. Some systems have a dual capacitor with both sides use for the compressor (start and run). Then, the separate capacitor is used for the fan run time unit.

After properly discharging the capacitors, remove the wire terminals and using a Volt/Ohm Meter (VOM) (this is an analog meter and you are using its internal battery) test them as follows:

Set the VOM meter to the highest ohm scale and connect the probes to the capacitor terminals. The reading should move rapidly from zero toward infinity and then slowly return to zero ohms. You should then reverse the leads and repeat the procedure. If there is no reading (open capacitor), or a prolonged zero reading (shorted capacitor), replace the capacitor. The combination capacitor has three terminals, the common terminal "C the terminals marked "F" and "HERM". To check the combination run

capacitor, follow the discharge procedures above. Again, make sure you test from "C" (common) to "F" (fan) and "C" (common) to "HERM" (compressor).

Some A-C units have a combination start and run three-terminal capacitor for the compressor with terminals labeled **S** (start), **R** (run) and **C** (common). These use a separate fan capacitor. If the capacitor is good then you could have a burnt out fan motor.

Compressor Not Starting

1. This failure is typically caused by the compressor start capacitor. You can check this using the same procedure as above. Always replace the three-terminal capacitor even if only one of its sections is defective. If the capacitor is good then the PTCR has probably failed and effectively disconnected the compressor start capacitor. If the PTCR is good, it will measure in the 20 to 40 ohm range. A defective unit will not give any reading.

2. If the refrigerant is low or some internal component has failed, you will have to replace the entire compressor unit and recharge the system. Since the refrigerant system is sealed leaks usually occur due to the thinning of the coil tubing over time. Paying to find the leaks and recharging the system, if the A-C is over 20 years old, is just not a good investment. Rather than replacing the compressor, in this old a unit, you should be purchasing a new A-C.

Compressor Starts Then Shuts Off

1. The first component to test would be the compressor **run** capacitor. Use the same procedure described above for the start capacitor. If the capacitor is good the problem might be the over load sensor, which has triggered because the compressor is consuming too much current. This could be caused by insufficient refrigerant, low ac line voltage or excessive dirt on the condenser coils.

2. In order to operate, the compressor and fan require about 15 amps for a 15,000 Btu A-C. This is about 1700 watts. If the ac line voltage goes down 10% than, since the power requirement remains the same, the operating current required will increase to 16.5 amps. With lower ac line voltages, startup compressor currents will also be higher. When the compressor cycles, on a hot day, the peak currents may be sufficient to trip the compressor over load sensor. To be safe I only run my A-C if the line voltage is over 107 volts. When running off a generator you should have at least a minimum 2800 watt rated unit. All of the manufacturers recommend a 3000-3500 watt generator for use with their A-C's with either the 13,500 or 15,000 Btu sizes. For two units they recommend a 5000-watt minimum size generator.

3. Severe dirt build-up on the condenser coils can restrict airflow and result in excessive heat buildup, which will also trigger the over load sensor. The outside part (above the roof) of the A-C unit should be cleaned at least every two years.

Not Cold Enough

1. A properly working system will provide a 16 to 22 degree drop in temperature as measured from the air inlet to the air outlet, directly on the A-C. If you are measuring in the return and/or outlet ductwork, your temperature drop may not be as high. This should be tested only after the unit has run for some time and the RV air temperature has been given enough time to stabilize. On hot days, you should be running your fan continuously to maximize the effectiveness of the A-C. This will help to keep the cool air circulating, provide a uniform temperature throughout the coach and reduce the startup current when the compressor cycles on and off. This is a particularly good idea for use in your home since the compressor will run less and this will also help reduce electricity costs.

2. A dirty interior air filter can severely reduce airflow and increase the length of time it takes to cool the coach. During the hot months, I would clean this filter at least once per week. Newer A-C units have washable filters that are easy to clean. Reverse blow the filter (use your vacuum cleaner in blower mode) to remove the loose dust and then wash them with a little soap and water. You can dry them quickly using the vacuum cleaner. You do not want too much air pressure as you might damage the filter material. If you have, the older paper filters replace them with the washable type and keep them clean.

3. If there is not a high enough airflow over the evaporator (condenser) coil or there is insufficient refrigerant you can develop icing which will further reduce the airflow. The icing sensor will turn off the compressor and put the fan on high speed. This will defrost the coils and allow the system to return to normal operation. If you suspect icing you can just turn off the A-C for an hour and let it melt.

MAINTENANCE

1. The primary maintenance requirements for an A-C is to keep the inside filters and the outside coils clean. You can use a vacuum and/or compressed air.

2. Insure that all electrical connections are tight and not corroded.

3. If you have A-C water drain tubes inside your walls you should reverse blow these out every year after your first heavy use day. This will get the dust and dirt out of the drain pan nipples and insure that you will not be rained on inside your coach.

APPENDIX A

Updating a 4-button CCC to a 12-button System

Buying the parts is easy!

Two Dometic Circuit Control Boxes w/boards, #3312020.000, which cost $108.00 each (new circuit boards are used with the new Dometic twelve button CCC).

One Dometic Twelve Button CCC, #3312024.023, which cost $100.50, plus shipping $7.99, for a Total cost of $324.49.

Now for the fun part!

When you get the new control circuit board, it is mounted inside a metal box with all the wiring harnesses and quick disconnect plugs... **no directions are included.**

The first thing I did was turn off all the AC & DC power to and in the coach!

Up on the coach roof: I took the top plastic shroud off the A-C unit and then took the cover off the circuit board enclosure on the starboard (right) side of the A-C. Inside this small - little - tight space is the circuit board along with the compressor starting capacitor and relay. There was no way the new circuit board mounted inside the new metal box was going to fit inside that space. Therefore, after a careful study of the situation, measuring and noting where the wiring attached and what it was supposed to connect to, I concluded that I would have to remove the new circuit board from the new metal box and mount it where the old circuit board was located. I had to remove the old circuit board from its mounting posts. Before doing so, you first have to remove two screws that hold the mounting plate for the capacitor, relay, and pull that unit up and out of the way. It was not necessary to disconnect any wires in order to move the mounting plate. Then you can get to the four small plastic mounting clips that hold the circuit board in place. I pulled the old circuit board out a short distance and systematically began removing one wire at a time and plugging the wire onto the new circuit board. Several of the quick disconnect plugs on the new circuit board were not relevant and were discarded along with the new metal mounting box... (My conclusion was that this circuit board and metal mounting box was made for several different models of A-C unit that now have quick plug in features). All of the existing wiring had connectors that fasten to the new board. There was only one new ground wire that attached to the circuit board, which had to be wired into the existing wiring harness. The old icing sensor, which is fastened to the evaporator coil tubing, had to be removed and replaced with a new thermistor sensor, included with the circuit control board kit. The wiring for this sensor is routed through the wall of the box that houses the evaporator coil and connects, with a quick disconnect plug, to the new circuit board. I tried to use the old sensor but it was not compatible with the new control board. You need to set the dipswitches on each circuit control board to correspond to the location of the board (zone 1 - front/main and Zone 2 - rear in my case) and the heating and cooling systems which are connected to the AC unit in that particular zone (i.e. heat strip, furnace, heat pump, etc.).

Inside the coach: I disconnected the old 4-button CCC from the RJ-11 cable and removed the old

mounting plate. I mounted the new CCC mounting plate to the wall (required a larger hole in the wall for the round protruding plastic case to recess into the wall. I plugged the new unit into the RJ-11 phone cable and turned the AC and DC power back on. You have to initialize the CCC so that it reads the various heating and air conditioning components that are in the system.

To do a **System reset, for a 12-button CCC 2** make sure the thermostat is in the OFF mode. Simultaneously press the **MODE** and **ZONE** buttons. The LCD display will display **IniT** and all available zones. Release the **MODE** and **ZONE** buttons and press the on/off button to exit system set up.

The above reset must be done for any changes in the system configuration that involves changing the dipswitches. The CCC also reads the setting of the dipswitches and determines how many zones are being controlled. Having done that I turned the thermostat on and selected Zone 1, Air Conditioner.... bingo ... after a short pause ....the A-C unit came to life. I did the same thing for Zone 2 and SUCCESS. I have not been able to test the furnace or heat strips because the ambient air temperature is too high to allow the systems to come on. I am confident they will work fine since the A-C units do. Having had success I went back up on the roof and put the covers back on the circuit board enclosures and put the plastic shrouds back on top of the air conditioners.

So there you have it.... about fours of work (could do it a lot faster now that I've determined what and how things need to be done) and a lot less investment than two new air conditioning units and a thermostat. We are so happy it is fixed and that we no longer have to deal with the old erratic 4-button unit.

Chuck Gregory
#1986

APPENDIX (B)

PRINCIPLES OF HEAT PUMP OPERATION

HEAT PUMP COOLING AND HEATING MODES:

Cooling Mode: Heat is removed from the **inside** air and released to the **outside** air.

Heating Mode: Heat is removed from the **outside** air and released to the **inside** air.

DEFINITION: A heat pump is one base unit which can operate in two modes, heating or cooling. The travel or flow of the refrigerant is reversed depending on which cycle you choose to operate, the heating cycle or the cooling cycle. The components used to accomplish this are the compressor, evaporator and condenser coils, reversing valve, capillary tubes, air movement system (motor and fan wheel), and refrigerant. The evaporator and condenser act as either the inside coils or the outside coils depending on the cycle of operation chosen.

THE COOLING MODE: To cool the air inside the vehicle, heat is removed from the inside air and released to the outside or ambient air.

To begin the cooling process, the air movement system establishes air flow which passes over both coils, the inside coil which in the cooling mode is the evaporator, and the outside coil, the condenser. Next, the refrigerant cycle is established starting at the compressor. The compressor's function is to take the low pressure vapor, and discharge it as high pressure vapor. As the refrigerant is compressed, it gives off heat causing the discharge line to be quite warm or hot to the touch in hot weather.

The high pressure vapor leaves the compressor through the discharge line and enters the reversing valve. The reversing valve routes the high pressure vapor to the outside or condenser coil. The high pressure vapor enters the outside coil (condenser) where, by passing through the coil, it is cooled and condensed into liquid. The heat is removed from the refrigerant, and expelled to the outside air. The refrigerant which began as a hot vapor, leaves the outside coil as a high pressure cooler liquid.

The high pressure liquid leaves the condenser and passes through the small capillary tube or tubes which will be warm to the touch. The capillary tube is the metering or flow control device in the sealed system. It determines the amount and force of refrigerant which enters the inside coil, or evaporator in the cooling cycle. For optimum efficiency, the capillary tube's length and diameter must never be altered.

The high pressure liquid refrigerant enters the inside coil/evaporator in a controlled amount from the capillary tube. The liquid enters the low pressure atmosphere of the inside coil and evaporates into vapor. During the evaporative process, heat is removed from the air flowing through the inside coil and the air, which is now cool, is returned to the inside of the vehicle via the air movement system (blower assembly).

After leaving the inside coil (evaporator), the low pressure refrigerant vapor returns to the reversing valve. The reversing valve routes the low pressure vapor to the compressor through the suction line to start the cooling process all over again.

THE HEATING MODE: To heat the air inside the vehicle, heat is removed from the outside air or ambient temperature, and released to the inside air.

When you heat a vehicle, the air conditioning process is reversed, with the compressor sending the high pressure vapor into the reversing valve which routes the vapor to the inside coil, which in the heating mode is the condenser coil.

The high pressure vapor enters the inside coil (condenser) where it is cooled, and condensed into liquid by passing through the coil. The heat removed from the refrigerant is expelled to the inside air by the air movement system. The refrigerant leaves the inside coil as a high pressure liquid.

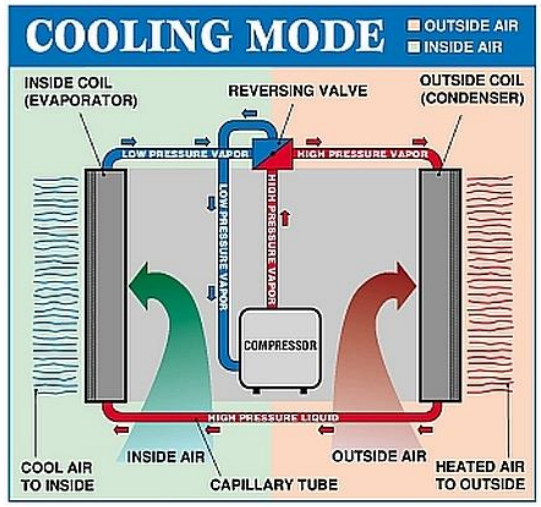

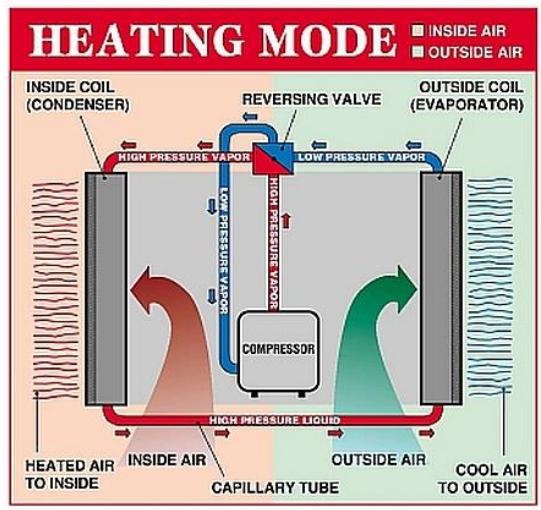

As the high pressure liquid leaves the inside coil (condenser) it passes through the small capillary tube or tubes, which act as the metering or flow control device in the sealed system.

The high pressure liquid refrigerant enters the outside coil (evaporator) in the controlled amount from the capillary tube. When the liquid enters the low pressure atmosphere of the outside coil (evaporator) it evaporates into vapor. When the evaporative process takes place, heat is removed from the air flowing through the outside coil (evaporator) and the air, which is now cool, is returned to the outside air (ambient) via the air movement system (blower assembly).

From the outside coil (evaporator), the low pressure refrigerant vapor returns to the reversing valve. The reversing valve routes the low pressure vapor to the compressor through the suction line to start the heating process again.

REFERENCES

1. Dometic Manuals: http://www.dometicmanuals.com/PROD/MASTERDometic.nsf?Opendatabase

2. Newer Dometic Equipment Manuals: http://www.dometic.com/enus/Americas/USA/Customer-Support/Operation--Installation-Manuals/

3. Older Air Conditioning Manuals: http://bryantrv.com/trbl.html